Product Information Packet

Model AHP-1300HC

NEMA-12, Solid State Air Conditioner, 24 VDC

Heat/Cool, Set for Remote Temperature Control

Part #0-Q495-1-000

Thank you for your purchase. Information has been enclosed regarding the installation, specifications, and wiring of your solid-state assembly.

Please read and follow all instructions carefully before installation. Only qualified technicians should install this equipment.

If you have any questions regarding your equipment, please do not hesitate to call us at 773-342-4900, and we will be happy to assist you.

We are open from 8:00 AM - 4:30 PM Central Time.

Included in this packet you will find:

Installation Notes for Air Conditioners

Product Literature and Specifications

Assembly Drawing # SK251006

Wiring Drawing # SK250915

Installation Drawing # SK251007

Warranty Information

teca

ThermoElectric Cooling America Corporation
4048 W. Schubert Avenue • Chicago, IL (U.S.A.) 60639
Ph: 773/342-4900 Fx: 773/342-0191
sales@thermoelectric.com www.thermoelectric.com

Important Installation Notes for Air Conditioners

Mounting Styles: Both 'thru mount' and 'flush mount' units can be positioned in any orientation and on any enclosure surface. It is important to consider interior air flow patterns when determining the mounting location. Also of importance is an unrestricted flow of ambient air thru the hot side heat exchanger. Ease of access and inspection must be considered for those applications in particularly severe environments which may require occasional maintenance.

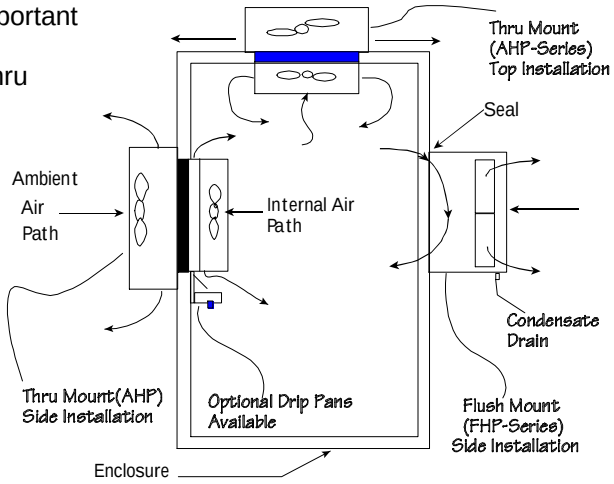

Vertical (Side/Front/Back) Mounting:

Vertical mounting refers to the vertical direction of the cold side or interior fins and is recommended for applications with high humidity, poor and incomplete cabinet seals or any condition which may cause the cold side fins to be maintained at temperatures below the dew point for long periods of time allowing for the formation of condensation. The vertical fin direction provides a drip path whereupon condensation can be collected via a moisture removal system (standard on FHP-units) or a drip pan positioned below the cold side fins. Drip pans are optional for thru mount units.

Condensate Removal System:

All FHP-Series and AHP-1400 air conditioners contain a built-in condensate removal system. The condensate kit consists of a antifungal sponge with a condensate wick. PVC tubing is also provided for drainage. Drip pans are optional for thru mount units which must be evaluated on an individual basis. Equations defining a relationship between the cold side fin and enclosure temperatures are provided to assist in the evaluation.

Top Mounting:

Though often the easiest location to mount it is often the most difficult to protect from condensation in this orientation due to the fin orientation, gravity and any susceptible components below. If a drip pan is employed by the end user use caution to place the pan far enough away from the internal fan to minimize the restriction of air flow. The pan should cover the fin ends as well as the fan area. When there is a choice, the vertical orientation is preferred by most users.

Maintenance:

Since the technology is solid-state, there are no filters, compressors, or fluorocarbons to maintain. The only moving parts are the fans. It is recommended for harsh or dirty environments that the heat sinks be cleaned from time to time. This can be accomplished by directing compressed air over the external fins or on NEMA 4 versions by hosing the unit down. This will increase the overall life and performance of the system.

Cautions:

Take care when mounting not to damage the seal between the hot and cold side sinks. Do not attempt to mount a unit to a warped surface or try to make the units mounting surface conform to an unflat surface. Do not pinch or damage any leads when mounting. Do not over tighten any installation screw, use reasonable force. Always mount with any condensate drain down. Do not compress the cold side between the hot side and any other surface. Do not obstruct the airflow on either side. When mounting consider the natural air flows of the enclosure. Connect power only after the installation is complete.

Notes on condensation:

Condensation occurs at the cold side fins when the surface temperature goes below the dew point. To reduce or remove condensate, consider the following:

- Regulate the Fin Temperature above the Dewpoint.
- Keep Enclosure Closed and Sealed from Outside Humidity.
- Use Desiccant (Moisture absorbing Granules.)
- Employ Condensate Removal System/Drip Pans.

If you have any questions regarding your installation, Please feel free to contact our technical department for assistance at 773-342-4900.

AHP-1300 | Air Conditioner/Heat Exchanger

Air Cooled
Through Mounted
Nema-12, 4, 4X

24 VDC
High Efficiency
760 BTU/HR



FEATURES

- Compact (only 15.2” x 6.2” x 8”)
- Mounts and operates in any orientation (horizontal, vertical, etc.)
- Low vibration and noise
- No moving parts except fans
- Environmentally safe
- No compressor, fluorocarbons or filters
- Virtually maintenance-free
- Stainless steel exterior housing
- Efficient heat exchanger mode (ECO-Mode)
- Easy to use Pivot Clean feature
- Weight 20 LBS.

CONTROL TEMPERATURES

Active Cooling	35°C
Heat Exchanger (ECO-Mode)	25°C
Active Heating	10°C
Typical Hysteresis	5°C
Operating Ambient	-40/+70°C
Operating Enclosure	-10/+60°C

POWER INPUTS

Voltage	24 VDC
Current, Active	11 AMPS
Current, ECO-Mode	2.3 AMPS

PERFORMANCE RATINGS

Cooling (Traditional)	760 BTU/HR
Cooling (Din 3168)	222 WATTS
Cooling COP (at L35 L35)	0.84
Heating (Traditional)	>900 BTU/HR
Heating (Din 3168)	>264 WATTS
Heating COP	>1.0

INCLUDES

- Temperature controller
- Mounting gasket
- Mounting hardware
- Power input leads
- Power saving heat exchanger mode (ECO-Mode)

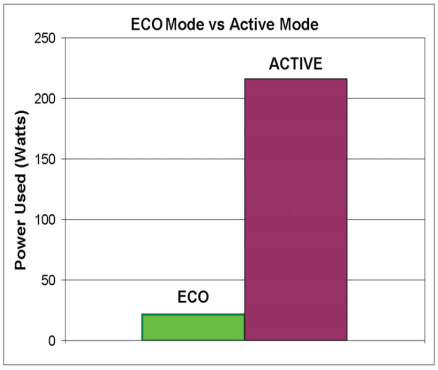

CONFIGURATIONS

MODEL	PART NUMBER	NOTES	External fan type	TEMP. CONTROL	ENVIRONMENT
AHP-1300	0-Q4J5-0-000	Cool only	Industrial grade	TC-4F	NEMA-12, IP 52
AHP-1300HC	0-Q495-1-000	Heat/Cool	Industrial grade	EXT*	NEMA-12, IP 52
AHP-1300HC	0-Q4I5-1-000	Heat/Cool	Industrial grade	TC-7F	NEMA-12, IP 52
AHP-1300XE	0-Q4J5-4-000	Cool only	Industrial grade, sealed	TC-4F	NEMA-4/4X, IP 56
AHP-1300XEHC	0-Q495-5-000	Heat/Cool	Industrial grade, sealed	EXT*	NEMA-4/4X, IP 56
AHP-1300XEHC	0-Q4I5-5-000	Heat/Cool	Industrial grade, sealed	TC-7F	NEMA-4/4X, IP 56
AHP-1300X	0-Q4J5-2-000	Cool only	Military grade, sealed	TC-4F	NEMA-4X/Harsh Env. IP 56
AHP-1300XHC	0-Q495-3-000	Heat/Cool	Military grade, sealed	EXT*	NEMA-4X/Harsh Env. IP 56
AHP-1300XHC	0-Q4I5-3-000	Heat/Cool	Military grade, sealed	TC-7F	NEMA-4X/Harsh Env. IP 56
AHP-1300XM♣	0-Q4J5-2-001	Cool only	Military grade, sealed	TC-4F	NEMA-4X/Harsh Env. IP 56
AHP-1300XMHC♣	0-Q495-3-001	Heat/Cool	Military grade, sealed	EXT*	NEMA-4X/Harsh Env. IP 56
AHP-1300XMHC♣	0-Q4I5-3-001	Heat/Cool	Military grade, sealed	TC-7F	NEMA-4X/Harsh Env. IP 56

♣ Full shock & vibration

* For controller options contact TECA

1-888-TECA-USA (832-2872)

teca®
ThermoElectric Cooling America Corporation
4048 W. Schubert Ave. Chicago, Illinois 60639

www.thermoelectric.com

Air Conditioner - Air Cooled

AHP-1300

MOUNTING STYLE
Through Mounted

ENVIRONMENTS SERVED
NEMA-12 IP 52
NEMA-4,4X IP 56

RATING (TRADITIONAL)
AHP-1300 760 BTU/hr @ 0°F ΔT
992 BTU/hr @ +20°F ΔT

RATING (DIN 3168)
AHP-1300 222 Watts L35 L35
125 Watts L35 L50

PERFORMANCE CURVE

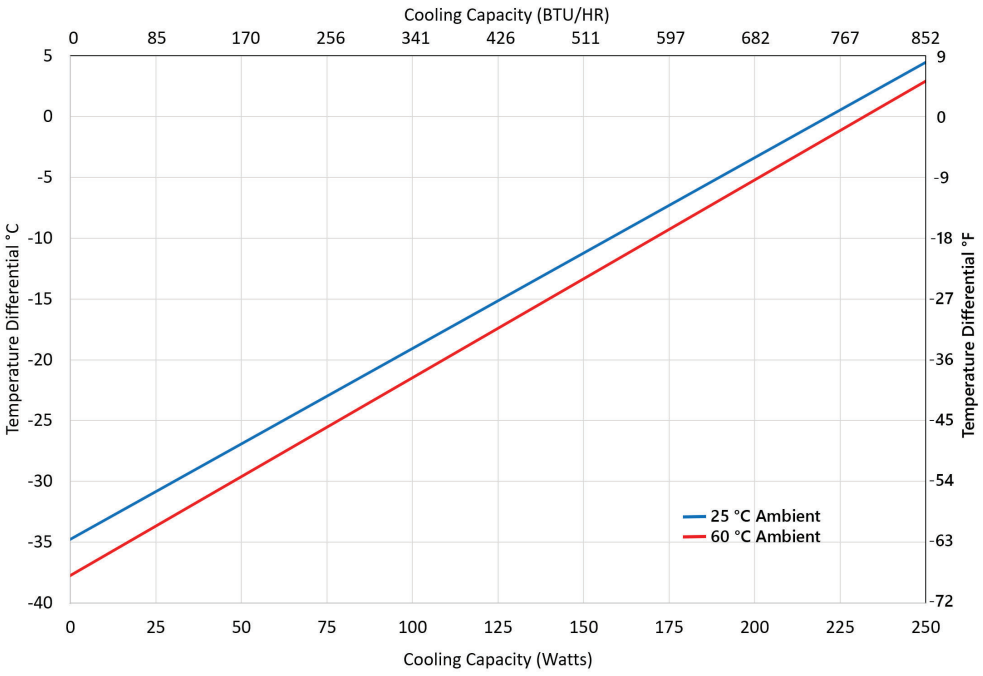

EQUATION OF LINE

y = ΔT(°C)
x = Capacity (Watts)

Ambient Temperature	35°C	50°C
Enclosure Air	y=.157x-34.8	y=.163x-37.7
Cold Sink	y=.116x-34.8	y=.121x-37.7

AIR FLOW PATTERN

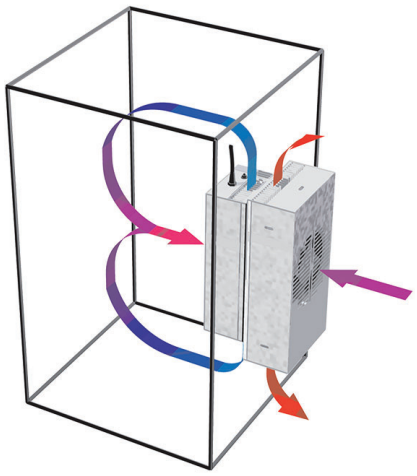

DIMENSIONS

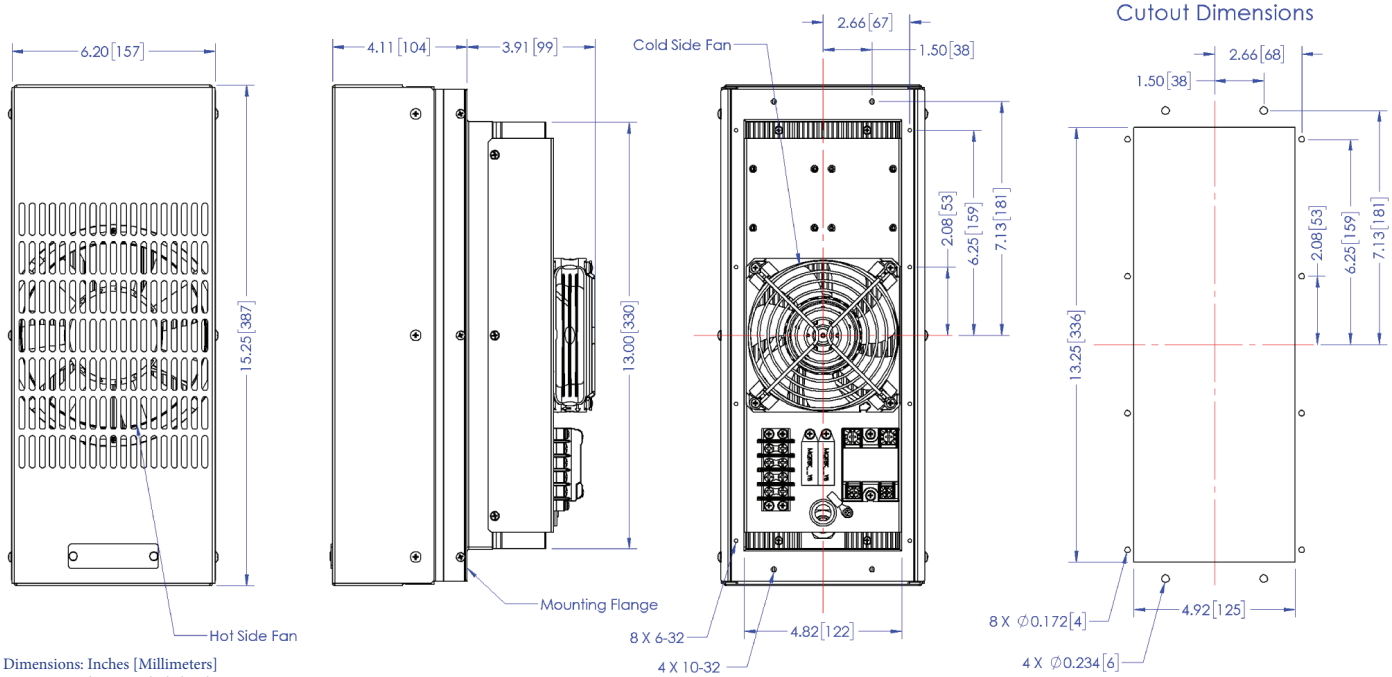

Dimensions: Inches [Millimeters]
Dimensions do not include hardware

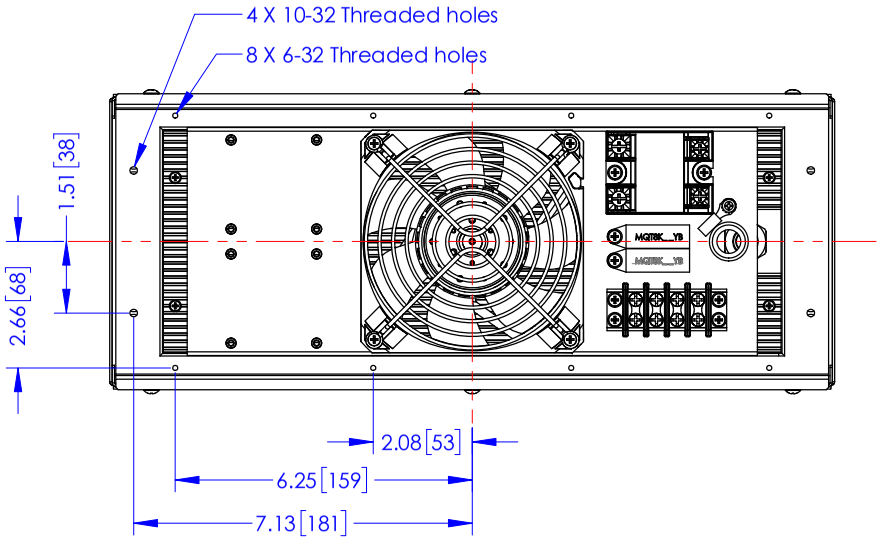

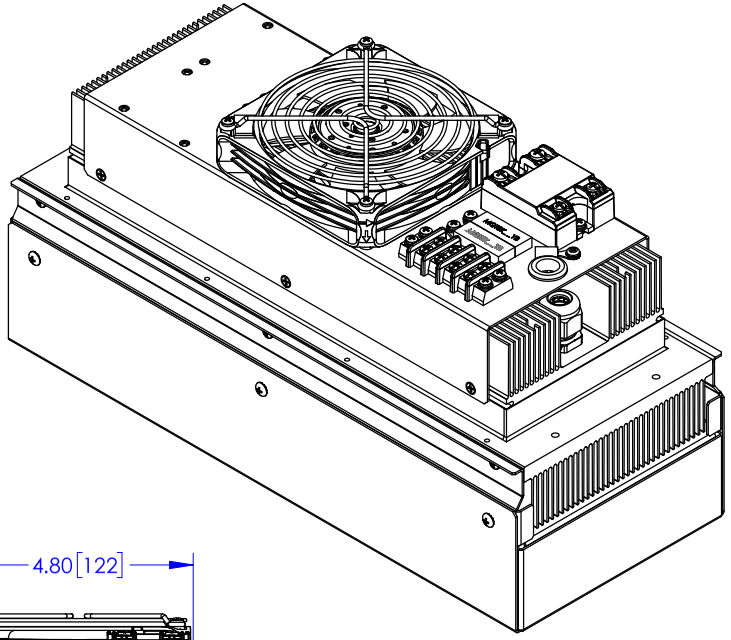

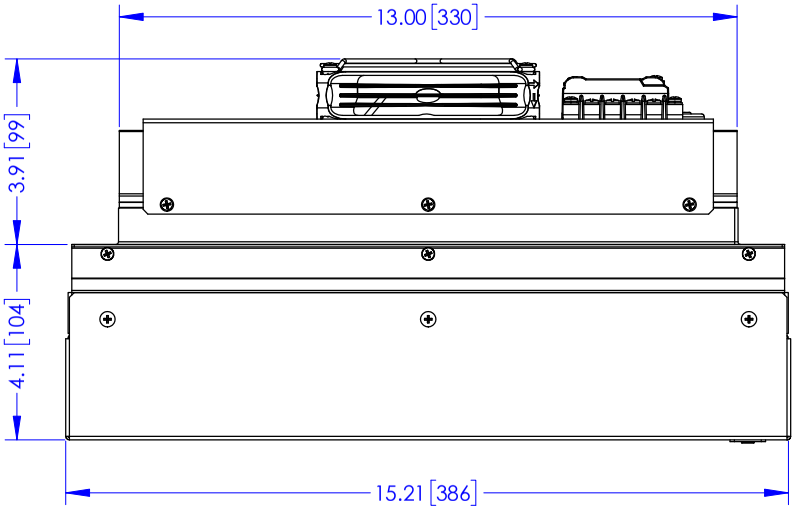

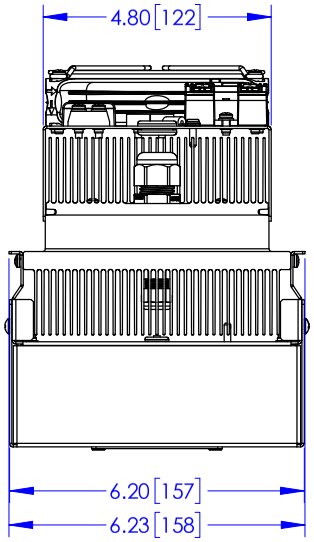

UNLESS OTHERWISE SPECIFIED:		NAME	DATE
DIMENSIONS ARE IN INCHES TOLERANCES: FRACTIONAL ±1/32 ANGULAR: MACH ±1° BEND ± TWO PLACE DECIMAL ±.015 THREE PLACE DECIMAL ±.005	DRAWN	AA	10/15/25
	CHECKED		
INTERPRET GEOMETRIC TOLERANCING PER:	**PROPRIETARY AND CONFIDENTIAL** THE INFORMATION CONTAINED IN THIS DRAWING IS THE SOLE PROPERTY OF TECA CORPORATION. ANY REPRODUCTION IN PART OR AS A WHOLE WITHOUT THE WRITTEN PERMISSION OF TECA CORPORATION IS PROHIBITED.		
MATERIAL			
FINISH			
DO NOT SCALE DRAWING			

teca®
ThermoElectric Cooling America Corporation
Chicago, Illinois U.S.A.

AHP-1300 SERIES ASSEMBLY

SIZE	DWG. NO.	REV
A	SK251006	

S2845 SHEET 1 OF 1

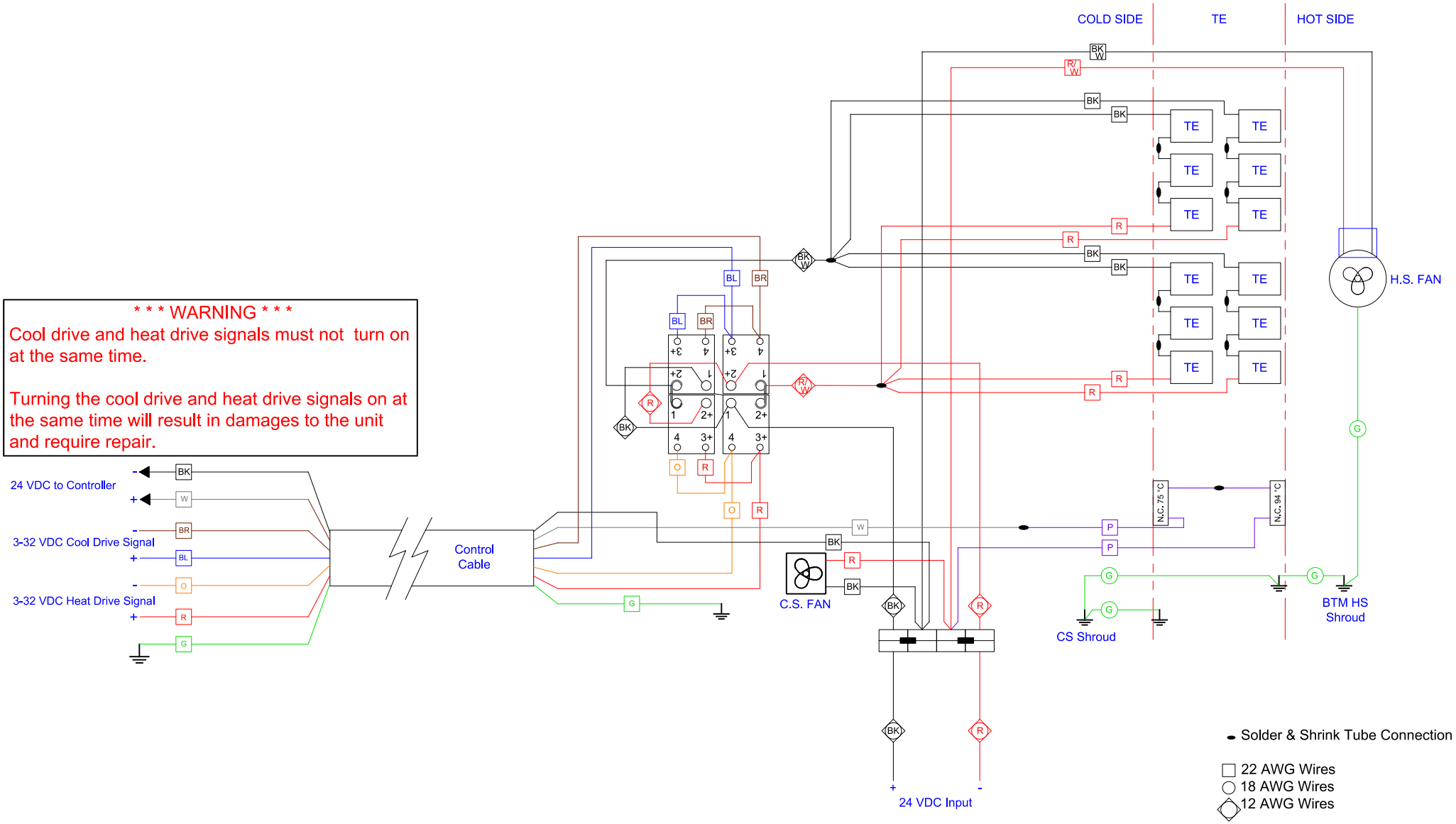

REV	DESCRIPTION	Date	APPROVED

INFORMATION DISCLOSED HEREIN IS THE CONFIDENTIAL PROPERTY OF TECA CORP. RECIPIENT SHALL NOT USE THE INFORMATION IN ANY UNAUTHORIZED MANNER.

UNLESS OTHERWISE SPECIFIED DIMENSIONS ARE IN INCHES
TOLERANCES ARE:

DECIMALS	ANGLE
.XX +/-	+/-
.XXX +/-	FRACTION +/-

FINISH:

MATERIAL:

THERMOELECTRIC COOLING AMERICA CORP.

AHP-1300HC SET FOR REMOTE TC WIRING DIAGRAM

DRAWN BY:	DRAWING #	REV LEVEL
AA	SK250915	
DATE: 09/26/2025		
S2839	SCALE	MASTER: Master
		SHEET

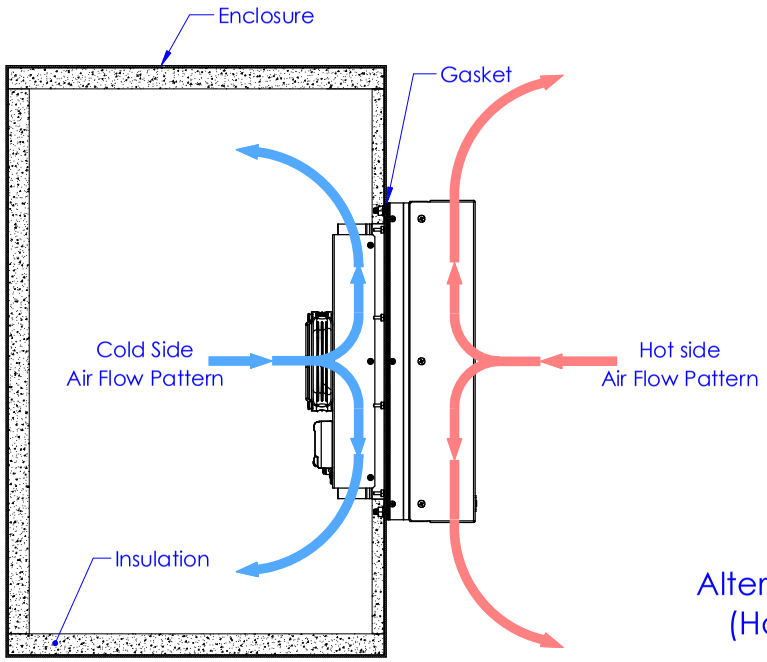

Typical Mounting (Vertical Fins)

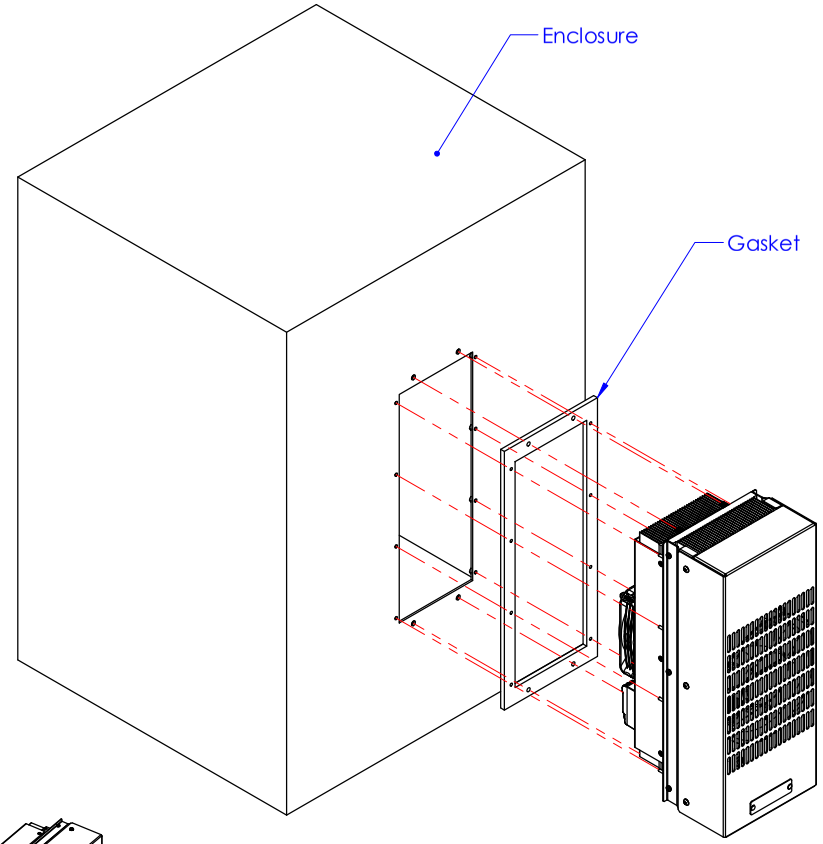

Alternate Mounting (Horizontal Fins)

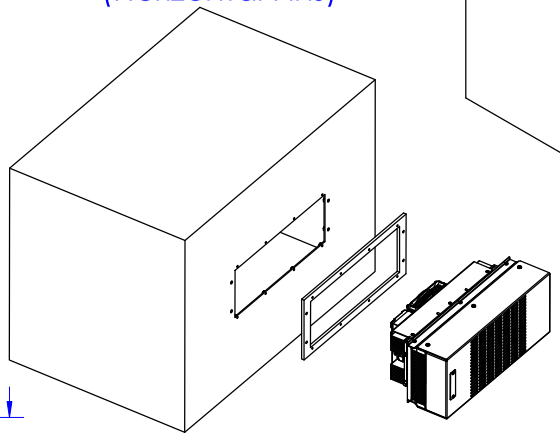

Mounting cutout Dimensions

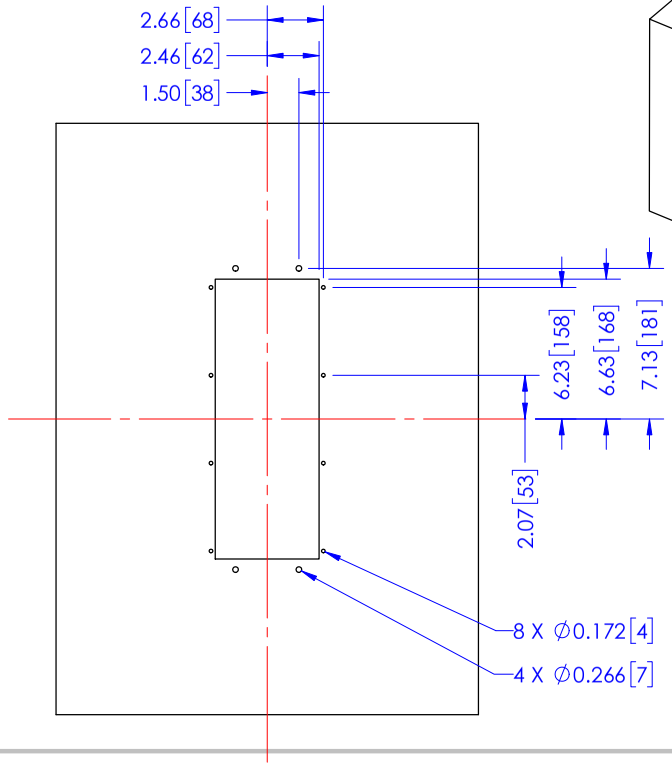

UNLESS OTHERWISE SPECIFIED:		NAME	DATE
DIMENSIONS ARE IN INCHES TOLERANCES: FRACTIONAL ± ANGULAR: MACH ± BEND ± TWO PLACE DECIMAL ± THREE PLACE DECIMAL ±	DRAWN	AA	10/16/25
	CHECKED		
INTERPRET GEOMETRIC TOLERANCING PER:	**PROPRIETARY AND CONFIDENTIAL** THE INFORMATION CONTAINED IN THIS DRAWING IS THE SOLE PROPERTY OF TECA CORPORATION. ANY REPRODUCTION IN PART OR AS A WHOLE WITHOUT THE WRITTEN PERMISSION OF TECA CORPORATION IS PROHIBITED.		
MATERIAL			
FINISH			
DO NOT SCALE DRAWING			

teca®
ThermoElectric Cooling America Corporation
Chicago, Illinois U.S.A.

AHP-1300 SERIES TYPICAL MOUNTING

SIZE	DWG. NO.	REV
A	SK251007	
	S2846	SHEET 1 OF 1

LIMITED WARRANTY

In the event a defect in material or workmanship is discovered in any of TECA's products within one year after the date they are delivered to Buyer, and if: (a) TECA is notified of the defect in writing by certified mail within 14 days of the date of discovery; (b) TECA may then either, at its sole discretion, inspect the product at Buyer's location, or require that the product be made available at Buyer's expense at TECA's premises for TECA's inspection within 14 days of the date of notification; and (c) the products are defective and the defects result from faulty materials and/or workmanship and not in any way from accident, misuse, misapplication, mishandling, modification, or alteration by the Buyer or the shipper, then TECA shall, at its sole option, repair or exchange defective products free of charge to Buyer, or credit to buyer the price of the defective products. ALL OTHER WARRANTIES, EXPRESS OR IMPLIED, ARE EXCLUDED, INCLUDING BUT NOT LIMITED TO THE IMPLIED WARRANTIES OF MERCHANTABILITY AND FITNESS FOR A PARTICULAR PURPOSE. IN NO EVENT SHALL TECA BE LIABLE FOR ANY CLAIM BASED UPON BREACH OF EXPRESS OR IMPLIED WARRANTY OR ANY OTHER DAMAGES WHETHER SPECIAL, INDIRECT, INCIDENTAL, CONSEQUENTIAL, LOST PROFITS, BUSINESS INTERRUPTION, OR LOSS OF BUSINESS OR CUSTOMER RELATIONSHIPS.

RETURNED GOODS, RESTOCKING CHARGES

In order to return merchandise for any reason (repair, replacement, or credit) a return authorization number must be issued by TECA. New merchandise may not be returned for credit beyond 60 days from shipment. Charges for incidental or other damages may also be made. All returned goods must be sent freight prepaid. A restocking charge of 15% will apply. On special equipment and custom modified equipment orders, additional incremental cancellation charges may be made.